KATO

SUPERBOOM

SR-250R

ROUGH TERRAIN CRANE

PREMIUM Roughter

EJIB

【SPECIFICATION】

■CRANE

Description		Rough terrain crane with maximum lifting capacity 25 ton
●Crane Specification		
Maximum rated lifting capacity		9.35m Boom: 25,000kg × 3.5m (Parts of line : 7)
		16.4 m Boom: 19,000kg × 4.0m (Parts of line : 6)
		23.45m Boom: 12,500kg × 5.5m (Parts of line : 4)
		30.5 m Boom: 8,000kg × 7.5m (Parts of line : 4)
		8.7 m Jib: 3,300kg × 75° (Parts of line : 1)
		13.1 m Jib: 2,100kg × 73° (Parts of line : 1)
		Rooster: 4,000kg (Parts of line : 1)
Boom length		9.35m — 30.5m
Fly jib length		8.7m — 13.1m
Maximum rated lifting height		31.2m (Boom)
		44.8m (jib)
Hoisting line speed (winch up)	Main winch	125m / min. (at 4th layer)
	Auxiliary winch	125m / min. (at 4th layer)
Hoisting hook speed (winch up)	Main winch	(Parts of line; 7) : 17.8m / min. (at 4th layer)
	Auxiliary winch	(Parts of line; 1) : 125.0m / min. (at 4th layer)
High-speed lowering Rope speed	Main winch	Reference value with no load at 163m / min. (at 4th layer)
	Auxiliary winch	
Boom derricking angle		0° — 83°
Boom derricking time		40s / 0° — 83°
Boom extending speed		9.35 — 30.5m / 93s
Slewing speed		2.9min^{-1}
Tail slewing radius		3,100mm
●Equipment and structure		
Boom type		Box-shaped, 4-section hydraulically telescopic type (Boom section 3 / 4 simultaneously operated)
Jib type		2 sections (2nd section of draw-out type) Hydraulic stepless tilting type (offset angles 5° — 60°)
Boom extension/ retraction equipment		Two hydraulic cylinders and wire ropes used together
Boom derricking/lowering equipment		One hydraulic cylinder of direct acting type with pressure-compensated flow control valve
Winch system Main & Auxiliary winches		Two units of Single winch Equipped with Hydraulic motor drive and Planetary gear speed reducer (built-in negative brake), High/Low speed switching system and Hydraulic compensated flow control valve.
Slewing equipment		Equipped with Hydraulic motor drive and a planetary gear speed reducer (built-in negative brake) Free/Lock change-over model
Slewing bearing		Ball bearing type
Outriggers	Type	Hydraulic H-beam type (with float and vertical cylinder in single unit)
	Extension width	6,600mm (Fully extended)
		6,000mm (Intermediately extended)
		5,000mm (Intermediately extended)
		3,800mm (Intermediately extended)
		2,310mm (Fully retracted)
Wire rope for hoisting	Main winch	Diameter: 16mm × Length: 175m
	Auxiliary winch	Diameter: 16mm × Length: 95m
●Hydraulic equipment		
Oil pump		Double variable plunger type, gear and plunger type
Hydraulic motor	Hoisting motor	Axial plunger type
	Slewing motor	Axial plunger type
Control valve		Double acting with integral check and relief valves (With Hydraulic compensated flow control valve)
Cylinder		Double acting type
Oil reservoir capacity		500L
●Safety devices		
		ACS (Automatic Crane System with Voice alarm), Slewing automatic stop system, Boom raise / lower dampening function, Boom extension / retraction dampening function, Working range limit mode, Outrigger status detector, Boom derricking / telescoping holding valve, Jib derricking holding valve, Overhoist prevention device, Winch holding valve, Automatic winch brake, Winch drum roller, Hydraulic safety valves, Outrigger lock pins, Slewing lock, Slewing warning lamp, Hydraulic oil temperature warning device, Hydraulic oil return filter warning device
●Standard equipment		
		Air conditioner(with cold/warm box), Hydraulic oil cooler, Working light (on boom, table and cab), Winch drum turning indication device, Hook for 25 ton, Hook for 4 ton
●Operator's cab		
		Hydraulic cab suspension, Adjustable steering wheel, Adjustable suspension seat, Power Window(external closing switch), Front windscreen wiper & washer (2 speed wiper), Roof window wiper & washer, Tea table, Cigarette lighter, Access step light, Floor mat, AM/FM Radio, Hot and cool box
●Optional equipment		
		ACS outside indicator, PA system, Door visor, Anemometer, Winch view camera

■CARRIER

●Carrier Specification		
Maximum traveling speed		49km/h
Grade ability		0.60 (tan θ)
Minimum turning radius (center of extreme outer tire)		8.2m (2 wheel steer)
		4.9m (4 wheel steer)
●Engine		
Model		Mitsubishi 6M60-TLE3A (with Intercooled turbocharger)
Type		4 cycle, 6 cylinders, water cooled, direct injection turbo-charged diesel engine with intercooling
Piston displacement		7.545L
Max. power		200kW at 2,600min^{-1}
Max. torque		785N·m at 1,400min^{-1}
●Equipment and structure		
Drive system		Switches between 2 wheel drive (4x2) and 4 wheel drive (4x4)
Torque converter		Engine mounted 3 elements 1 stage (with lock up clutch)
Transmission		Remote mounted full automatic
Number of speeds		4 forward & 1 reverse speed (with HI - Low selector)
Axles	Front	Full floating type, with a two-stage reduction gear
	Rear	Full floating type, with a two-stage reduction gear
Suspension	Front	Taper - leaf spring (hydraulic locking device with shock absorber)
	Rear	Taper - leaf spring (hydraulic locking device with shock absorber)
Brake system	Service	Air-over hydraulic disk brake on 4 wheels (front and rear independent circuit)
	Parking	Spring applied, electrically air released parking brake mounted on front axle, internal expanding type
	Auxiliary	Exhaust brake (electronically controlled torque convertor interlocking) Eddy current type retarder, Auxiliary braking unit for working
Steering	Model	All hydraulic power steering with reverse steering correction system
	Mode	Front 2 wheel steering, counter steering, crab steering, rear 2 wheel steering, independent front and rear wheel steering (5 modes) (with automatic rear steering lock system)
Tire size	Front	385 / 95 R25 170E ROAD
	Rear	385 / 95 R25 170E ROAD
Fuel tank capacity		300 L
Batteries		(12V-120AH) ×2
●Safety devices		
		Emergency steering device, Rear wheel steering lock system (automatic), Miss-shifting prevention system, Brake fluid leak warning device, Service brake lock, Suspension lock, Engine overspeed alarm, Radiator coolant level warning device, Electrically stowed side mirrors, Mirror on the right side of the boom, Rearview camera and color monitor, Air filter service warning device
●Standard equipment		
		Centralized lubricating system
●Optional equipment		
		Right side view camera, Left side view camera, Wheel stopper, Way side lamp, Side marker lamp

■GENERAL Dimensions

Overall length		11,565mm
Overall width		2,620mm
Overall height		3,475mm
Wheel base		3,650mm
Treads	Front	2,170mm
	Rear	2,170mm
Passenger capacity		One person
Gross vehicle mass	Gross weight	approx. 26,495kg
	Front weight	approx. 13,180kg
	Rear weight	approx. 13,315kg

- Stow the hooks in place before traveling.
- Before you use this machine, read the precautions in the instruction manual thoroughly to operate it correctly.
- KATO products and specifications are subject to improvements and changes without notice.

5110010301

■RATED LIFTING CAPACITY

Based on ISO 4305
Not exceed 75% of static tipping loads

9.35m — 30.5m Boom

Working radius (m)	(6.6m) Outriggers fully extended (360° full range)				(6.0m) Outriggers intermediately extended (over side)				(5.0m) Outriggers intermediately extended (over side)				(3.8m) Outriggers intermediately extended (over side)				(2.31m) Outriggers completely retracted (over side)			
	9.35m Boom	16.4m Boom	23.45m Boom	30.5m Boom	9.35m Boom	16.4m Boom	23.45m Boom	30.5m Boom	9.35m Boom	16.4m Boom	23.45m Boom	30.5m Boom	9.35m Boom	16.4m Boom	23.45m Boom	30.5m Boom	9.35m Boom	16.4m Boom	23.45m Boom	30.5m Boom
2.5	25.00	19.00	12.50		25.00	19.00	12.50		25.00	19.00	12.50		25.00	19.00	12.50		12.00	11.60	9.20	
3.0	25.00	19.00	12.50		25.00	19.00	12.50		25.00	19.00	12.50		25.00	19.00	12.50		12.00	11.60	9.20	
3.5	25.00	19.00	12.50	8.00	25.00	19.00	12.50	8.00	25.00	19.00	12.50	8.00	22.20	19.00	12.50	8.00	9.20	9.10	8.80	5.50
4.0	23.00	19.00	12.50	8.00	23.00	19.00	12.50	8.00	23.00	19.00	12.50	8.00	16.50	15.90	12.50	8.00	7.25	7.10	7.40	5.50
4.5	21.20	18.15	12.50	8.00	21.20	18.15	12.50	8.00	21.20	18.15	12.50	8.00	12.95	12.80	12.50	8.00	5.85	5.75	6.25	5.20
5.0	19.40	17.00	12.50	8.00	19.40	17.00	12.50	8.00	17.90	17.00	12.50	8.00	10.55	10.40	10.80	8.00	4.80	4.70	5.40	4.55
5.5	17.80	16.00	12.50	8.00	17.80	16.00	12.50	8.00	14.60	14.35	12.50	8.00	8.80	8.60	9.40	8.00	4.05	3.90	4.55	4.00
6.0	16.30	15.05	12.20	8.00	16.30	15.05	12.20	8.00	12.20	12.00	12.20	8.00	7.45	7.30	8.05	7.95	3.40	3.25	3.90	3.55
6.5	15.10	14.25	11.50	8.00	15.10	14.25	11.50	8.00	10.40	10.20	11.05	8.00	6.45	6.25	6.95	7.10	2.90	2.75	3.35	3.15
7.0		13.45	10.80	8.00		12.25	10.80	8.00		8.80	9.60	8.00		5.40	6.10	6.40		2.30	2.90	2.80
7.5		12.70	10.20	8.00		10.60	10.20	8.00		7.70	8.45	8.00		4.70	5.35	5.70		1.95	2.50	2.45
8.0		11.10	9.60	7.60		9.30	9.60	7.60		6.75	7.50	7.60		4.10	4.75	5.10		1.60	2.20	2.20
9.0		8.75	8.60	6.90		7.35	8.10	6.90		5.35	6.05	6.35		3.20	3.80	4.10		1.00	1.65	1.70
10.0		7.10	7.70	6.25		5.95	6.65	6.25		4.30	4.95	5.25		2.50	3.10	3.40		0.50	1.20	1.35
11.0		5.80	6.50	5.70		4.90	5.55	5.70		3.50	4.15	4.45		1.95	2.55	2.80			0.80	1.00
12.0		4.85	5.50	5.20		4.10	4.75	5.00		2.85	3.50	3.75		1.45	2.10	2.35				
13.0		4.10	4.70	4.80		3.40	4.05	4.35		2.30	2.95	3.25		1.05	1.70	1.95				
13.5		3.75	4.40	4.60		3.10	3.75	4.05		2.05	2.70	3.00		0.85	1.50	1.80				
14.0			4.05	4.35			3.50	3.75			2.45	2.75			1.35	1.65				
15.0			3.55	3.80			3.00	3.30			2.10	2.35			1.05	1.35				
16.0			3.10	3.35			2.60	2.90			1.75	2.05			0.80	1.10				
17.0			2.70	2.95			2.25	2.55			1.45	1.75			0.55	0.85				
18.0			2.35	2.60			1.95	2.20			1.20	1.50				0.65				
19.0			2.05	2.30			1.65	1.95			1.00	1.25				0.45				
20.0			1.75	2.05			1.45	1.70			0.80	1.10								
20.5			1.65	1.90			1.35	1.60			0.70	1.00								
21.0				1.80				1.50				0.90								
22.0				1.60				1.30				0.70								
24.0				1.25				0.95												
26.0				0.95				0.70												
27.9				0.75				0.45												
Critical boom angle	—	—	—	—	—	—	—	—	—	—	—	*35°*	—	—	*34°*	*46°*	—	*41°*	*56°*	*65°*
Standard hook	for 25 ton				for 25 ton				for 25 ton				for 25 ton				for 25 ton			
Hook mass	220kg				220kg				220kg				220kg				220kg			
Parts of line	7	6	4	4	7	6	4	4	7	6	4	4	7	6	4	4	7	6	4	4

(Unit : Metric ton)

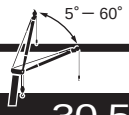

Based on ISO 4305
Not exceed 75% of static tipping loads

30.5m Boom＋8.7m Jib

(6.6m)

Outriggers fully extended (360° full range)

Boom angle (°)	Offset 5° Working radius (m)	Offset 5° Load (ton)	Offset 25° Working radius (m)	Offset 25° Load (ton)	Offset 45° Working radius (m)	Offset 45° Load (ton)	Offset 60° Working radius (m)	Offset 60° Load (ton)
83	4.9	3.30	7.4	2.30	9.2	1.60	9.8	1.05
75	10.9	3.30	13.0	2.30	14.2	1.53	14.4	1.05
73	12.3	3.25	14.3	2.28	15.4	1.49	15.5	1.05
71	13.6	2.93	15.5	2.14	16.5	1.45	16.6	1.04
69	14.9	2.65	16.7	1.99	17.6	1.43	17.7	1.04
65	17.4	2.23	19.0	1.76	19.7	1.37	19.7	1.04
62	19.1	1.99	20.6	1.62	21.3	1.34	21.0	1.04
58	21.3	1.72	22.7	1.46	23.2	1.31		
56	22.4	1.48	23.8	1.37	24.2	1.27		
55	22.9	1.39	24.2	1.30	24.6	1.27		
50	25.3	0.98	26.5	0.91	26.5	0.91		
46	27.0	0.71	28.0	0.68	28.0	0.68		
45	27.4	0.65	28.4	0.62				
40	29.5	0.38	30.4	0.35				
Critical boom angle	39°		39°		45°		61°	
Standard hook	for 4 ton							
Hook mass	60kg							
Parts of line	1							

(6.0m)

Outriggers intermediately extended (over side)

Boom angle (°)	Offset 5° Working radius (m)	Offset 5° Load (ton)	Offset 25° Working radius (m)	Offset 25° Load (ton)	Offset 45° Working radius (m)	Offset 45° Load (ton)	Offset 60° Working radius (m)	Offset 60° Load (ton)
83	4.9	3.30	7.4	2.30	9.2	1.60	9.8	1.05
75	10.9	3.30	13.0	2.30	14.2	1.53	14.4	1.05
73	12.3	3.25	14.3	2.28	15.4	1.49	15.5	1.05
71	13.6	2.93	15.5	2.14	16.5	1.45	16.6	1.04
69	14.9	2.65	16.7	1.99	17.6	1.43	17.7	1.04
65	17.4	2.23	19.0	1.76	19.7	1.37	19.7	1.04
62	19.1	1.92	20.6	1.62	21.3	1.34	21.0	1.04
60	20.2	1.65	21.7	1.51	22.2	1.33		
58	21.2	1.43	22.7	1.31	23.2	1.30		
55	22.7	1.14	24.1	1.06	24.5	1.05		
50	25.1	0.75	26.3	0.70	26.5	0.70		
46	26.9	0.49	27.9	0.46	27.9	0.46		
45	27.4	0.42	28.3	0.41				
Critical boom angle	44°		44°		45°		61°	
Standard hook	for 4 ton							
Hook mass	60kg							
Parts of line	1							

(5.0m)

Outriggers intermediately extended (over side)

Boom angle (°)	Offset 5° Working radius (m)	Offset 5° Load (ton)	Offset 25° Working radius (m)	Offset 25° Load (ton)	Offset 45° Working radius (m)	Offset 45° Load (ton)	Offset 60° Working radius (m)	Offset 60° Load (ton)
83	4.9	3.30	7.4	2.30	9.2	1.60	9.8	1.05
75	10.9	3.30	13.0	2.30	14.2	1.53	14.4	1.05
73	12.3	3.25	14.3	2.28	15.4	1.49	15.5	1.05
71	13.6	2.93	15.5	2.14	16.5	1.45	16.6	1.04
69	14.9	2.46	16.7	1.99	17.6	1.43	17.7	1.04
68	15.4	2.27	17.3	1.93	18.1	1.41	18.2	1.04
64	17.6	1.60	19.4	1.40	20.3	1.33	20.2	1.04
62	18.7	1.33	20.4	1.19	21.2	1.14	21.0	1.04
61	19.8	1.10	21.4	0.99	22.1	0.97		
55	22.4	0.62	23.9	0.55	24.3	0.55		
53	23.3	0.48	24.9	0.40	25.1	0.40		
Critical boom angle	52°		52°		52°		61°	
Standard hook	for 4 ton							
Hook mass	60kg							
Parts of line	1							

30.5m Boom＋8.7m Jib

(3.8m)

Outriggers intermediately extended (over side)

Boom angle (°)	Offset 5° Working radius (m)	Offset 5° Load (ton)	Offset 25° Working radius (m)	Offset 25° Load (ton)	Offset 45° Working radius (m)	Offset 45° Load (ton)	Offset 60° Working radius (m)	Offset 60° Load (ton)
83	4.9	3.30	7.4	2.30	9.2	1.60	9.8	1.05
76	10.2	3.30	12.3	2.30	13.6	1.55	13.9	1.05
75	10.9	2.96	13.0	2.30	14.2	1.53	14.4	1.05
71	13.2	1.96	15.2	1.63	16.5	1.45	16.6	1.04
68	14.9	1.40	16.9	1.17	18.0	1.09	18.2	1.04
65	16.6	0.97	18.5	0.82	19.4	0.79	19.6	0.78
62	18.3	0.59	20.2	0.48	20.9	0.48	20.9	0.48
Critical boom angle	61°		61°		61°		61°	
Standard hook	for 4 ton							
Hook mass	60kg							
Parts of line	1							

511-74302002

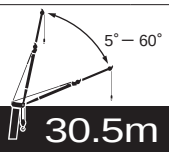

30.5m Boom＋13.1m Jib

(6.6m)

Outriggers fully extended (360° full range)

Boom angle (°)	Offset 5° Working radius (m)	Offset 5° Load (ton)	Offset 25° Working radius (m)	Offset 25° Load (ton)	Offset 45° Working radius (m)	Offset 45° Load (ton)	Offset 60° Working radius (m)	Offset 60° Load (ton)
83	5.8	2.10	9.8	1.25	12.8	0.85	14.0	0.65
77	11.0	2.10	14.4	1.25	16.8	0.85	17.6	0.65
73	14.2	2.10	17.3	1.20	19.3	0.85	20.0	0.65
71	15.7	2.03	18.7	1.15	20.5	0.85	21.0	0.64
65	19.9	1.62	22.5	1.03	24.0	0.83	24.1	0.63
62	21.8	1.48	24.3	0.99	25.5	0.81	25.7	0.63
60	23.1	1.38	25.5	0.96	26.6	0.80		
55	26.1	1.15	28.3	0.91	29.0	0.79		
53	27.2	1.00	29.3	0.89	29.9	0.79		
51	28.2	0.87	30.2	0.80	30.6	0.79		
46	30.6	0.58	32.3	0.54	32.4	0.54		
45	31.1	0.52	32.7	0.49				
43	32.0	0.43	33.5	0.41				
Critical boom angle	42°		42°		45°		61°	
Standard hook	for 4 ton							
Hook mass	60kg							
Parts of line	1							

(6.0m)

Outriggers intermediately extended (over side)

Boom angle (°)	Offset 5° Working radius (m)	Offset 5° Load (ton)	Offset 25° Working radius (m)	Offset 25° Load (ton)	Offset 45° Working radius (m)	Offset 45° Load (ton)	Offset 60° Working radius (m)	Offset 60° Load (ton)
83	5.8	2.10	9.8	1.25	12.8	0.85	14.0	0.65
77	11.0	2.10	14.4	1.25	16.8	0.85	17.6	0.65
73	14.2	2.10	17.3	1.20	19.3	0.85	20.0	0.65
71	15.7	2.03	18.7	1.15	20.5	0.85	21.0	0.64
65	19.9	1.62	22.5	1.03	24.0	0.83	24.1	0.63
62	21.8	1.48	24.3	0.99	25.5	0.81	25.7	0.63
60	23.1	1.37	25.5	0.96	26.6	0.80		
59	23.7	1.27	26.1	0.94	27.1	0.80		
57	24.9	1.09	27.2	0.92	28.0	0.80		
55	26.1	0.92	28.3	0.84	29.0	0.79		
50	28.7	0.59	30.6	0.54	31.0	0.53		
48	29.7	0.48	31.5	0.44	31.7	0.44		
Critical boom angle	47°		47°		47°		61°	
Standard hook	for 4 ton							
Hook mass	60kg							
Parts of line	1							

30.5m Boom＋13.1m Jib

(5.0m)

Outriggers intermediately extended (over side)

Boom angle (°)	Offset 5° Working radius (m)	Offset 5° Load (ton)	Offset 25° Working radius (m)	Offset 25° Load (ton)	Offset 45° Working radius (m)	Offset 45° Load (ton)	Offset 60° Working radius (m)	Offset 60° Load (ton)
83	5.8	2.10	9.8	1.25	12.8	0.85	14.0	0.65
77	11.0	2.10	14.4	1.25	16.8	0.85	17.6	0.65
73	14.2	2.10	17.3	1.20	19.3	0.85	20.0	0.65
71	15.7	2.03	18.7	1.15	20.5	0.85	21.0	0.64
67	18.5	1.72	21.3	1.07	22.9	0.84	23.1	0.63
63	21.0	1.21	23.7	1.00	25.1	0.81	25.1	0.63
62	21.5	1.12	24.3	0.96	25.5	0.81	25.7	0.63
60	22.7	0.93	25.4	0.80	26.6	0.73		
55	25.5	0.54	27.9	0.47	29.0	0.39		
Critical boom angle	54°		54°		54°		61°	
Standard hook	for 4 ton							
Hook mass	60kg							
Parts of line	1							

511-74302002

(3.8m)

Outriggers intermediately extended (over side)

Boom angle (°)	Offset 5° Working radius (m)	Offset 5° Load (ton)	Offset 25° Working radius (m)	Offset 25° Load (ton)	Offset 45° Working radius (m)	Offset 45° Load (ton)	Offset 60° Working radius (m)	Offset 60° Load (ton)
83	5.8	2.10	9.8	1.25	12.8	0.85	14.0	0.65
77	11.0	2.10	14.4	1.25	16.8	0.85	17.6	0.65
74	13.4	2.10	16.6	1.23	18.7	0.85	19.4	0.65
71	15.4	1.62	18.7	1.15	20.5	0.85	21.0	0.64
69	16.6	1.32	19.9	0.98	21.7	0.85	22.1	0.64
66	18.5	0.93	21.5	0.71	23.5	0.61	23.6	0.61
64	19.7	0.72	22.6	0.54	24.5	0.45	24.6	0.45
Critical boom angle	63°		63°		63°		63°	
Standard hook	for 4 ton							
Hook mass	60kg							
Parts of line	1							

■When the outriggers are not used

Based on ISO 4305
Not exceed 75% of static tipping loads

Working radius (m)	Stationary on rubber						Pick & carry (less than 2 km/h)						Working radius (m)
	9.35m Boom		16.4m Boom		23.45m Boom		9.35m Boom		16.4m Boom		23.45m Boom		
	Over front	360° full range	Over front	360° full range	Over front	360° full range	Over front	360° full range	Over front	360° full range	Over front	360° full range	
3.0	13.50	8.10	9.00	7.30			10.00	6.10	6.60	5.10			3.0
3.5	12.00	6.80	9.00	6.70	6.50	4.50	8.95	5.10	6.60	4.90	5.50	3.20	3.5
4.0	10.75	5.80	9.00	5.65	6.50	4.50	8.00	4.30	6.60	4.10	5.50	3.20	4.0
4.5	9.65	4.90	9.00	4.60	6.50	4.50	7.10	3.65	6.60	3.45	5.50	3.20	4.5
5.0	8.70	4.00	8.20	3.75	6.50	4.30	6.40	3.10	6.00	2.75	5.50	3.20	5.0
5.5	7.80	3.35	7.40	3.10	6.05	3.65	5.75	2.55	5.40	2.25	5.15	2.75	5.5
6.0	7.00	2.80	6.60	2.55	5.65	3.10	5.20	2.15	5.00	1.80	4.80	2.35	6.0
6.5	6.25	2.30	5.90	2.10	5.25	2.65	4.70	1.80	4.45	1.50	4.45	2.00	6.5
7.0			5.20	1.70	4.85	2.30			3.90	1.20	4.15	1.70	7.0
8.0			4.00	1.05	4.10	1.60			3.00	0.70	3.45	1.25	8.0
9.0			3.15		3.50	1.05			2.40		2.80	0.90	9.0
10.0			2.50		3.00	0.65			1.80		2.30		10.0
11.0			2.00		2.50				1.30		1.90		11.0
12.0			1.60		2.10				1.00		1.55		12.0
13.0			1.25		1.75				0.75		1.25		13.0
14.0					1.45						1.00		14.0
15.0					1.20						0.75		15.0
16.0					0.95						0.55		16.0
17.0					0.75								17.0
18.0					0.55								18.0
Critical boom angle	—	—	—	*50°*	*29°*	*59°*	—	—	—	*49°*	*38°*	*61°*	Critical boom angle
Standard hook	for 25 ton						for 25 ton						Standard hook
Hook mass	220kg						220kg						Hook mass
Parts of line	4						4						Parts of line

(Unit : Metric ton)

■Notes for the lifting capacity chart

■When the outriggers are used

1. The lifting capacity chart indicates the maximum load which can be lifted by this crane provided it is level and standing on firm level ground. The values in the chart include the mass of the main hook and slings for boom operation, and auxiliary hook and slings for jib operation.
   [25 ton hook (mass: 220kg), 4 ton hook (mass: 60kg)]
   Within the chart the figures in the area bordered with a thick line are based on structural limitations while other figures are determined by stability limitations.
2. The working radii are the actual values allowing for boom and jib deflection. Therefore you must always operate the crane on the basis of working radius.
3. The jib working radius is based on the jib mounted on the end of the 30.5m boom. When operating at other boom lengths, use the boom angle alone as the criterion.
4. Do not operate the jib when the outriggers are completely retracted.
5. The lifting capacities for the over sides vary with the outriggers extension width. Therefore for each outriggers extension condition you should work according the lifting capacity chart.
   Use the lifting capacity chart of outriggers full extended for both front and rear areas lifting capacities.

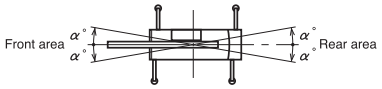

Outrigger extension status	Intermediate extension (6.0m)	Intermediate extension (5.0m)	Intermediate extension (3.8m)	Full retraction
Area α°	35	30	20	3

6. The lifting capacity of the rooster sheave is the lifting capacity of the boom minus the mass of all attached hook, slings etc. to the boom, with an upper limit of 4,000kg.
   [The hook for use with the rooster sheave is the 4 ton hook (mass: 60kg) with one part of line.]
7. If the boom length, boom angle, working radius and/or jib angle exceeds the rated value, use the lifting capacity for the rated value or for the next one, whichever gives the smaller lifting capacity.
8. If you are working with the boom while the jib is rigged, subtract 2,400kg plus the mass of all attached hook, slings etc. to the boom from the each lifting capacity of the boom, with an upper limit of 14 ton.
   Do not use the rooster sheave in this situation. And do not operate the boom while the jib is rigged, when the outriggers are completely retracted.
9. In whatever working conditions the corresponding boom critical angel is shown in the chart. The crane can tip over if the boom is lowered below the critical angle even if unloaded.
   Therefore, never lower the boom below these angles.
10. The standard parts of line for each boom length are as indicated in the chart. If you work with a non-standard number of parts of line, do not exceed 37.2kN (3.8tf) per wire rope respectively.
11. If you are work with 7 parts of line on the hook, use the rooster sheave.
12. High-speed lowering operation should only be performed to allow descent of the hook alone. Avoid sudden lever operation.
13. Outriggers full retraction condition is applied only to the crane with H-type outriggers.
14. Crane operation is permissible up to a wind speed of 10m/s. Even in relatively light wind conditions, extra care should be taken when handling loads presenting large wind catching areas.
15. Kato bears no liability whatsoever for crane tipping or damage caused by crane operations with a load in excess of the lifting capacity or incorrect procedure.

■When the outriggers are not used

1. The lifting capacity chart indicate the maximum load the crane can lift when its body is level on firm level ground with all tires inflated to the rated pressure and suspension cylinder completely retracted. The values in the chart include the mass of the main hook and slings.
   Within the chart the figures in the area bordered with a thick line are based on structural limitations while other figures are determined by stability limitations.
   [Rated tire pressure: 900kPa (9.0kgf/cm^2)]
2. The working radii are the actual values allowing for boom deflection. Therefore you must always operate the crane on the basis of the working radius.
3. The lifting capacity differs between the front area capacity and the full range capacity. When slewing from the front to the side, take care that the crane could not be over loaded.

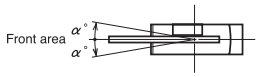

Crane operation	Stationary crane-on-rubber operation	Pick and carry operation
Area α°	1	1

4. Do not work with the jib or with a boom length of more than 23.45m.
5. For stationary crane-on-rubber operation, the parking brake and service brake lock device must be engaged.
6. For pick and carry operation, the high/low speed switch must be switched to "ON" (low range) and the shift lever set to speed 1.
7. For pick and carry operation, lower the load to just above the ground and keep your speed strictly below 2km/h to avoid swinging the load.
   Take particular care to avoid sharp turns, sudden starts and stops.
8. Never operate the crane during pick and carry operation. The slewing brake must be applied.
9. The lifting capacity of the rooster sheave is the lifting capacity of the boom minus the mass of all attached hook, slings etc. to the boom, with an upper limit of 4,000kg.
   [The hook for use with the rooster sheave is the 4 ton hook (mass: 60kg) with one part of line.]
10. If the boom length, boom angle, working radius and/or jib angle exceeds the rated value, use the lifting capacity for the rated value or for the next one, whichever gives the smaller lifting capacity.
11. In whatever working conditions the corresponding boom critical angel is shown in the chart. The crane can tip over if the boom is lowered below the critical angle even if unloaded.
    Therefore, never lower the boom below these angles.
12. The standard parts of line for each boom length are as indicated in the chart. If you work with a non-standard number of parts of line, do not exceed 37.2kN (3.8tf) per wire rope respectively.
13. High-speed lowering operation should only be performed to allow descent of the hook alone. Avoid sudden lever operation.
14. Crane operation is permissible up to a wind speed of 10m/s. Even in relatively light wind conditions, extra care should be taken when handling loads presenting large wind catching areas.
15. Kato bears no liability whatsoever for crane tipping or damage caused by crane operations with a load in excess of the lifting capacity or incorrect procedure.

■WORKING RANGE

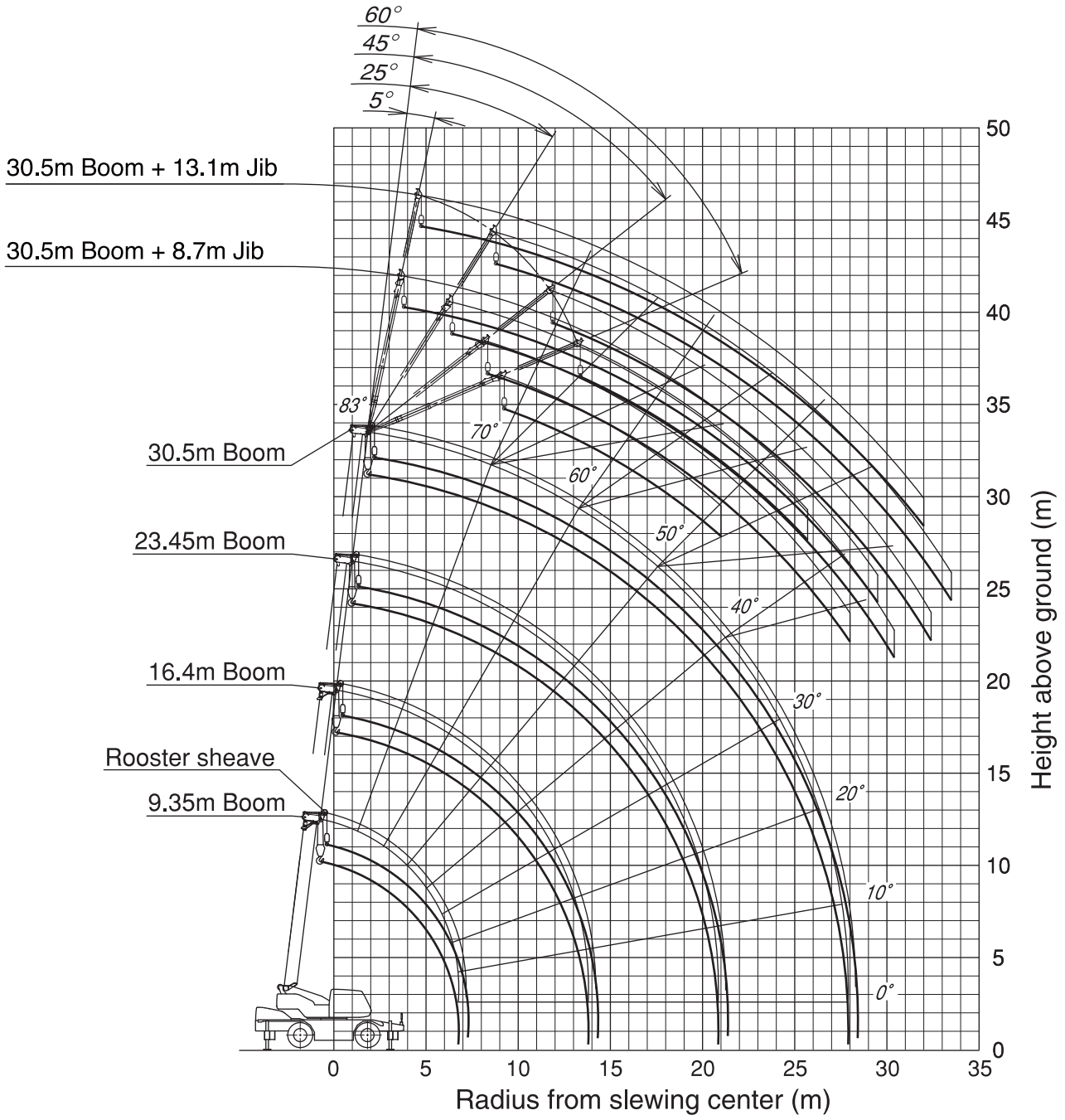

Note:
1. This diagram does not include deflection of Boom and Fly jib.
2. The outriggers are fully extended.

■Minimum path width

●Right turn in two-wheel steering mode

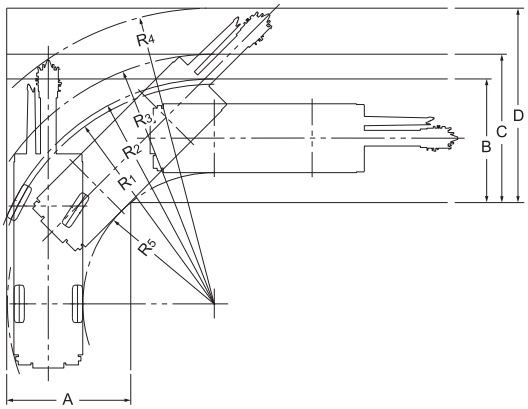

- R_1=8.20m (Minimum turning radius)
- R_2=8.40m (Turning radius of extremely outer tyre)
- R_3=9.35m (Chassis turning radius)
- R_4=11.07m (Boom end turning radius)
- R_5=4.92m (Turning radius extremely chassis inner)
- A=4.63m (Width of entrance)
- B=4.63m (Width of wheel exit)
- C=5.57m (Width of chassis exit)
- D=7.28m (Width of exit at end of boom)

●Right turn in 4-wheel steering mode

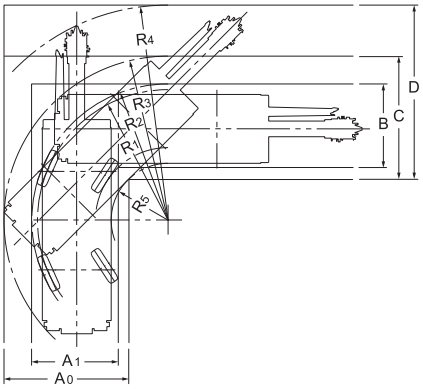

- R_1=4.90m (Minimum turning radius)
- R_2=5.10m (Turning radius of extremely outer tyre)
- R_3=6.17m (Chassis turning radius)
- R_4=8.09m (Boom end turning radius)
- R_5=2.10m (Turning radius extremely chassis inner)
- A_0=4.66m (Width of chassis entrance)
- A_1=3.25m (Width of wheel entrance)
- B =3.25m (Width of wheel exit)
- C =4.66m (Width of chassis exit)
- D =6.58m (Width of exit at end of boom)

Note: The above values are based on calculations.

■Overall view

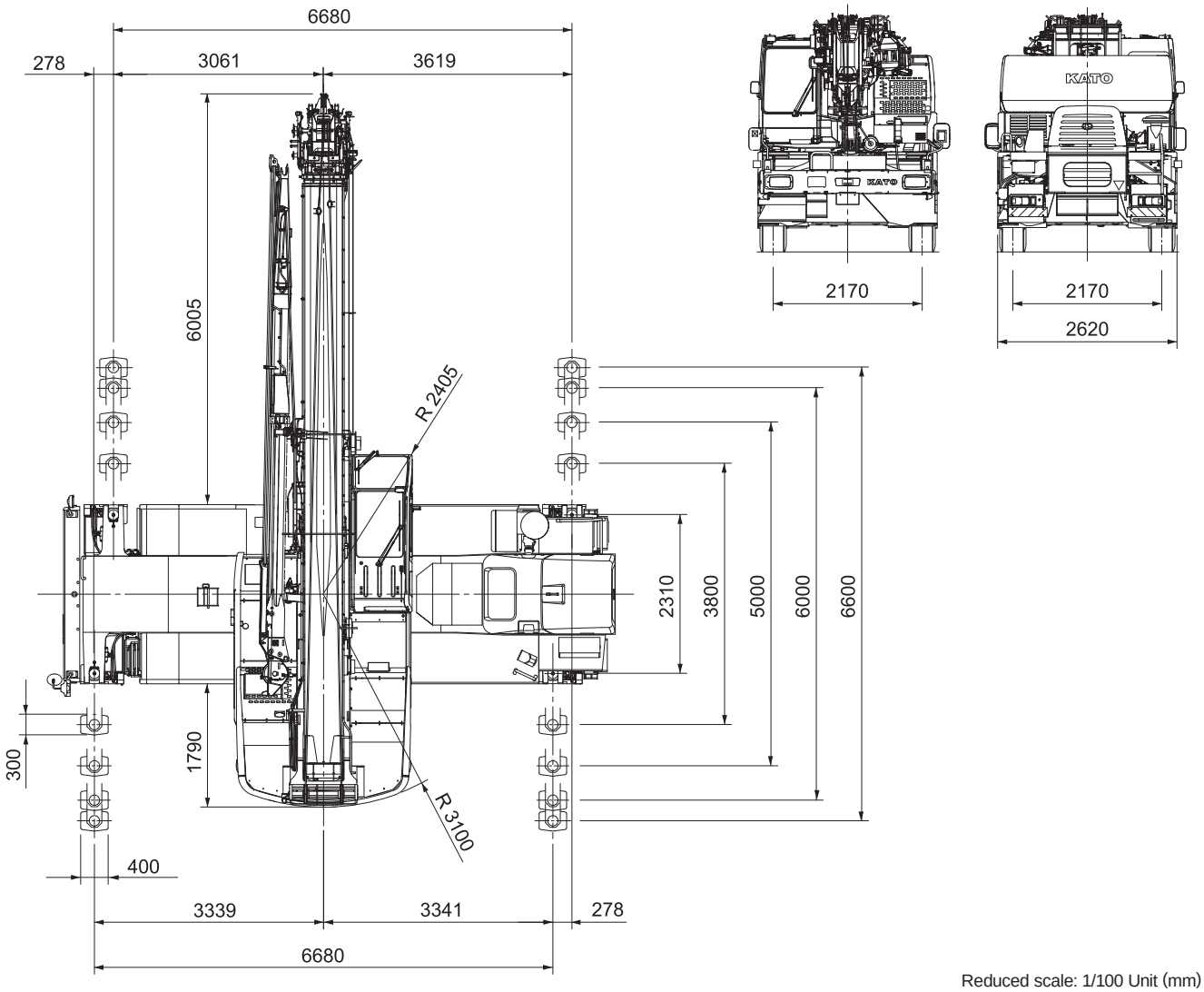

Reduced scale: 1/100 Unit (mm)

■Overall view

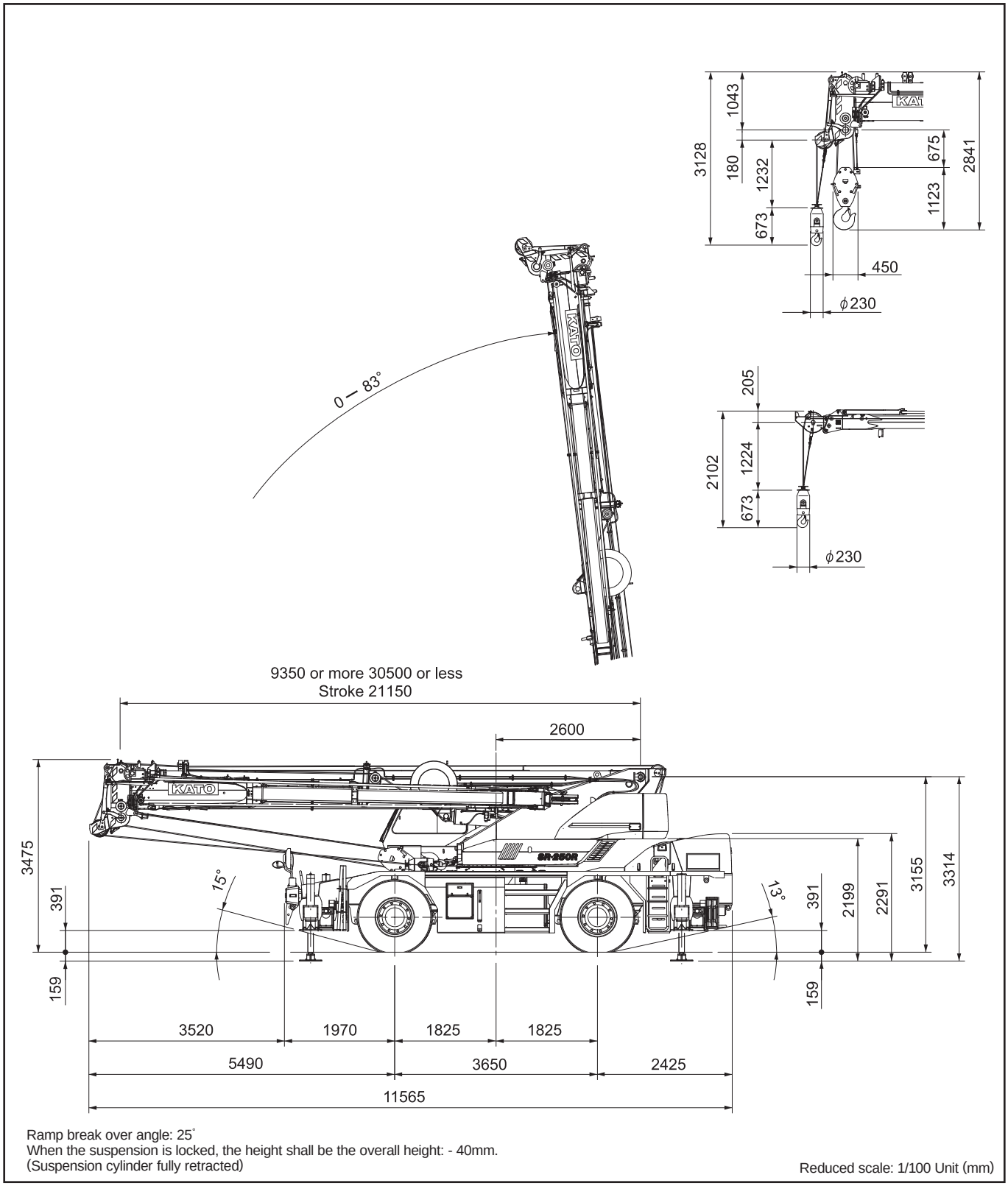

Ramp break over angle: 25°
When the suspension is locked, the height shall be the overall height: - 40mm.
(Suspension cylinder fully retracted)

Reduced scale: 1/100 Unit (mm)

* KATO products and specifications are subject to improvements and changes without notice.

Address inquiries to:

KATO

KATO WORKS CO.,LTD.

9-37, Higashi-ohi 1-chome,Shinagawa-ku, Tokyo, 140-0011, Japan
Tel. : Head Office Tokyo (03) 3458-1111
Overseas Marketing Department. Tokyo (03) 3458-1115
Fax. : Tokyo (03) 3458-1152
URL http://www.kato-works.co.jp

C03351
12.2012-1000 (TI) 1

ISO 9001 BUREAU VERITAS Certification

We acquired the "ISO 9001" certification which is an international standard for quality assurance.